ROUND 4 - Sunday, May 15, 2022

SHOTLINK

AT&T Byron Nelson

1
Green Depth **38**

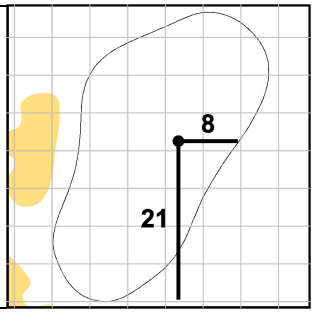

2
Green Depth **35**

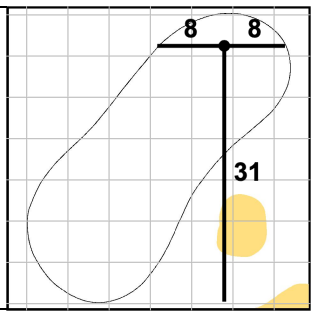

3
Green Depth **34**

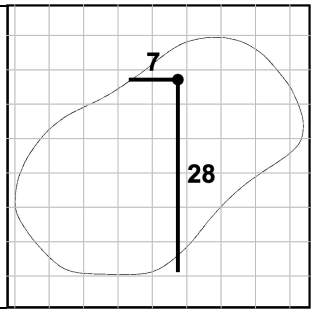

4
Green Depth **30**

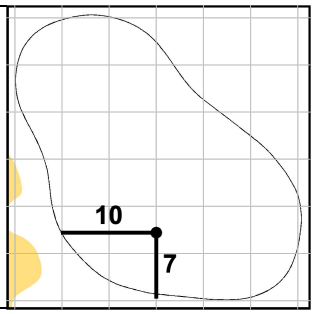

5
Green Depth **37**

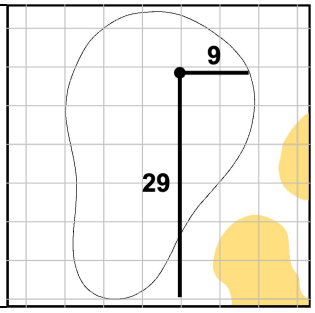

6
Green Depth **28**

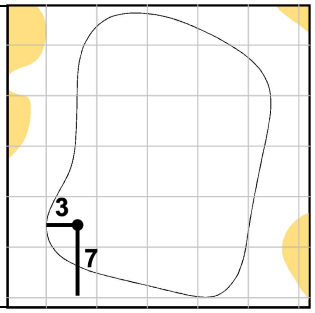

7
Green Depth **33**

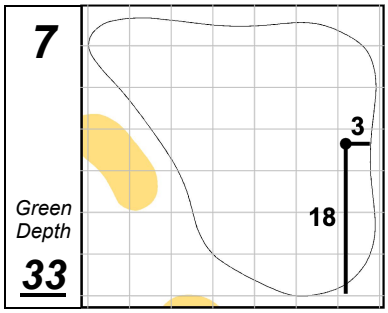

8
Green Depth **34**

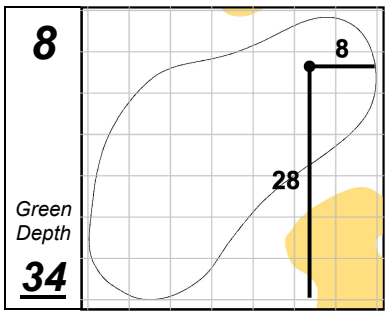

9
Green Depth **39**
38

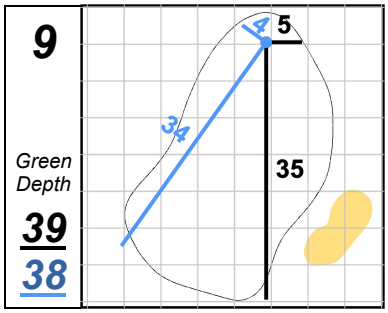

10
Green Depth **36**

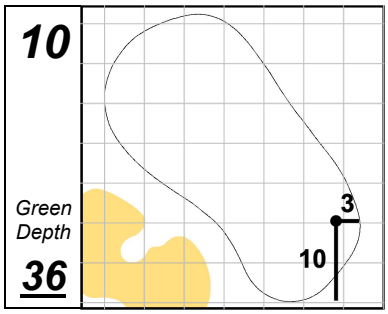

11
Green Depth **30**

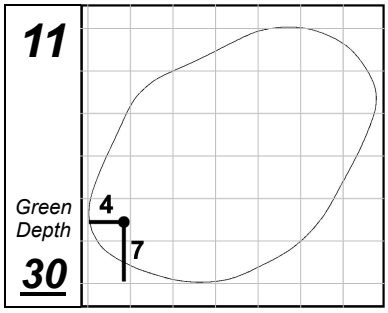

12
Green Depth **40**

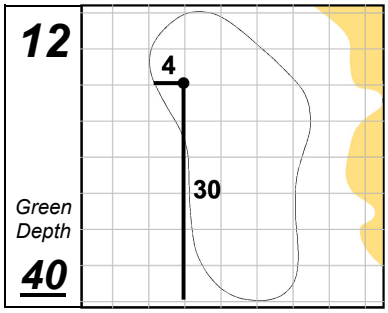

TPC Craig Ranch

13
Green Depth **28**

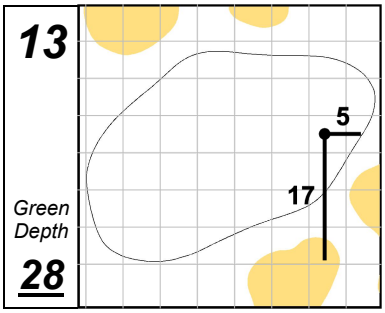

14
Green Depth **31**

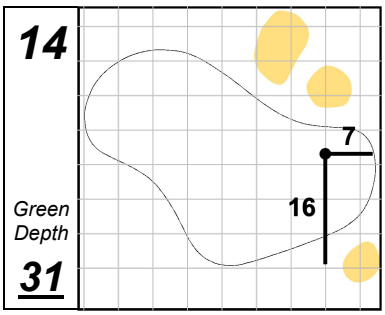

15
Green Depth **33**

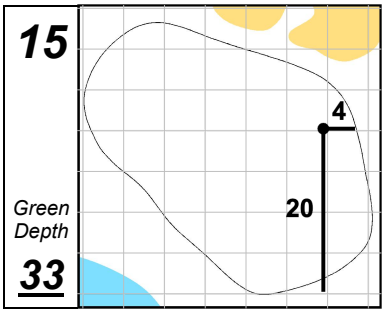

16
Green Depth **34**

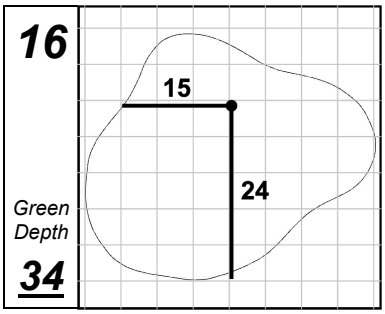

17
Green Depth **37**

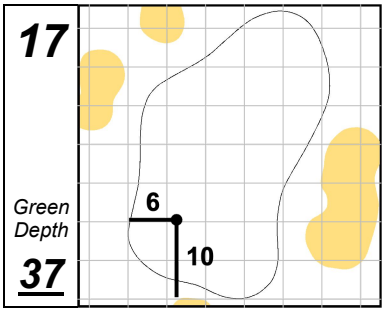

18
Green Depth **25**

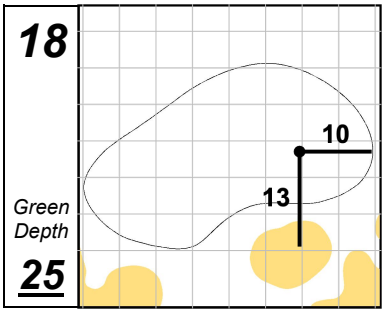

Each side of a complete square on the green represents 5 YARDS.

Saturday, May 14, 2022 10:34:27 AM